SIEMENS
Ingenuity for life

Passivation and Reintegration of F-/O

S7-1200/1500, ET 200SP, STEP 7 Safety Basic/Advanced

https://support.industry.siemens.com/cs/ww/en/view/22304119

Siemens Industry Online Support

Warranty and Liability

Note

The Application Examples are not binding and do not claim to be complete regarding the circuits shown, equipping and any eventuality. The Application Examples do not represent customer-specific solutions. They are only intended to provide support for typical applications. You are responsible for ensuring that the described products are used correctly. These Application Examples do not relieve you of the responsibility to use safe practices in application, installation, operation and maintenance. When using these Application Examples, you recognize that we cannot be made liable for any damage/claims beyond the liability clause described. We reserve the right to make changes to these Application Examples at any time without prior notice.
If there are any deviations between the recommendations provided in these Application Examples and other Siemens publications − e.g. Catalogs − the contents of the other documents have priority.

We do not accept any liability for the information contained in this document.
Any claims against us – based on whatever legal reason – resulting from the use of the examples, information, programs, engineering and performance data etc., described in this Application Example shall be excluded. Such an exclusion shall not apply in the case of mandatory liability, e.g. under the German Product Liability Act ("Produkthaftungsgesetz"), in case of intent, gross negligence, or injury of life, body or health, guarantee for the quality of a product, fraudulent concealment of a deficiency or breach of a condition which goes to the root of the contract ("wesentliche Vertragspflichten"). The damages for a breach of a substantial contractual obligation are, however, limited to the foreseeable damage, typical for the type of contract, except in the event of intent or gross negligence or injury to life, body or health. The above provisions do not imply a change of the burden of proof to your detriment.
Any form of duplication or distribution of these Application Examples or excerpts hereof is prohibited without the expressed consent of the Siemens AG.

Security information

Siemens provides products and solutions with industrial security functions that support the secure operation of plants, systems, machines and networks.
In order to protect plants, systems, machines and networks against cyber threats, it is necessary to implement – and continuously maintain – a holistic, state-of-the-art industrial security concept. Siemens' products and solutions only form one element of such a concept.
Customer is responsible to prevent unauthorized access to its plants, systems, machines and networks. Systems, machines and components should only be connected to the enterprise network or the internet if and to the extent necessary and with appropriate security measures (e.g. use of firewalls and network segmentation) in place.
Additionally, Siemens' guidance on appropriate security measures should be taken into account. For more information about industrial security, please visit http://www.siemens.com/industrialsecurity.

Siemens' products and solutions undergo continuous development to make them more secure. Siemens strongly recommends to apply product updates as soon as available and to always use the latest product versions. Use of product versions that are no longer supported, and failure to apply latest updates may increase customer's exposure to cyber threats.
To stay informed about product updates, subscribe to the Siemens Industrial Security RSS Feed under http://www.siemens.com/industrialsecurity.

Table of Contents

1 Introduction

Content

The present application example describes the passivation and reintegration of F-I/O. With two provided STEP 7 projects (for the S7-1200 or S7-1500), you can reproduce the statements contained in this document.

Passivation

Due to the safety function, a fail-safe module (F-Module) automatically outputs substitute values instead of process values in the following cases:

- Start-up of F-System
- Fault at fail-safe communication (communication fault) between F-CPU and F-I/O via the PROFIsafe safety protocol.
- F-I/O/channel fault (e.g. wire break, short circuit, discrepancy fault)
- Activating a passivation of F-I/O in the F-I/O DB with PASS_ON = 1.

If an F-channel outputs substitute values, it is passivated.

The table below shows possible faults that cause passivation.

Table 1-1: Possible faults that cause passivation

Fault scenario	F-Module/ F-I/O	Possible fault trigger
Peripheral fault	F-DI/F-DQ centrally in S7-1500 F-CPU	Failure of the power supply
	F-DI/F-DQ centrally in S7-1200 F-CPU	
	F-DI/F-DQ decentrally in ET 200SP	• Failure of the power supply • Removal of F-Module
Channel fault	F-DI/F-DQ centrally in S7-1500 F-CPU	• Wire break from sensor to F-DI • Read-back fault of actuator signal
	F-DI/F-DQ centrally in S7-1200 F-CPU	
	F-DI/F-DQ decentrally in ET 200SP	
Communication fault	F-CPU/ET 200SP	Interruption of the PROFINET connection

Reintegration

After eliminating the fault that caused the passivation, the switchover from substitute values to process values can be performed. The switchover can be done automatically or after a user acknowledgment in the safety program.

The switchover is referred to as "reintegration".

The type of reintegration depends on:

- the cause for the passivation of the F-I/O or the channels of the F-I/O
- a configuration that is to be done by you in the F-I/O DB or the configuration of the F-Module S7-1500/ET 200MP/F-Module S7-1200 and, where appropriate, of the DP norm slaves/IO norm devices according to the "RIOforFA-Safety" profile.

2 Functionality of reintegration

This chapter provides the following knowledge:

- Fundamental possibilities for the reintegration (Chap. 2.1);
- PROFIsafe-Profil RIOforFA-Safety (Chap. 2.2)
- Binary information from the QBAD bit from the F-I/O DB and the value state from the process image of the inputs (PII) (Chap. 2.3).

2.1 Possibilities for reintegration

2.1.1 Manual and automatic reintegration

There are two options for reintegrating a channel or F-I/O:

- Manual reintegration (Chap. 3.4)
- Automatic reintegration (Chap. 3.5)

The configuration of the reintegration depends on the fault type and whether the F-Module supports the RIOforFA-Safety profile (Chap. 2.2). The table below provides an overview on this matter:

Table 2-1: Possible configurations for a reintegration of F-I/O

		Fault type			
		Channel fault or peripheral fault		Communication fault *1)	
RIOforFA-Safety profile	with	In the hardware configuration "Channel fault acknowledgement = Automatic"	In the hardware configuration "Channel fault acknowledgement = Manual"	Not possible	In the hardware configuration "Channel fault acknowledgement = Manual"
	without	F-I/O DB: ACK_NEC=0	F-I/O DB: ACK_NEC=1	Not possible	F-I/O DB: ACK_NEC=1
		Automatic	Manual	Automatic	Manual
		Type of reintegration			

*1) The behavior after a communication fault cannot be configured. A manual reintegration must always be performed.

Depending on whether the F-Module supports the RIOforFA-Safety profile, you need to perform the settings via the hardware configuration or via the F-I/O DB.

2.1.2 Realizing the reintegration in the safety program

ACK_REI or ACK_GL

Reintegration into the safety program is only possible if:

- you have configured "Manual reintegration" in the hardware configuration and the F-Module supports the RIOforFA-Safety profile, or
- the ACK_NEC parameter of the F-I/O DB is set to 1 and the F-Module does not support the RIOforFA-Safety profile.

If you want to reintegrate channels of an F-Module, assign a positive edge to the ACK_REI:

Figure -1 Manual reintegration, using the example of F-DI

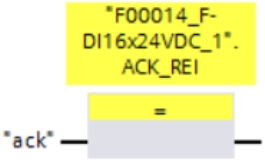

The following figure shows where to find the ACK_REI parameter:

Figure 2-2 ACK_REI parameter of the F-I/O DB of the F-DI of the ET 200SP

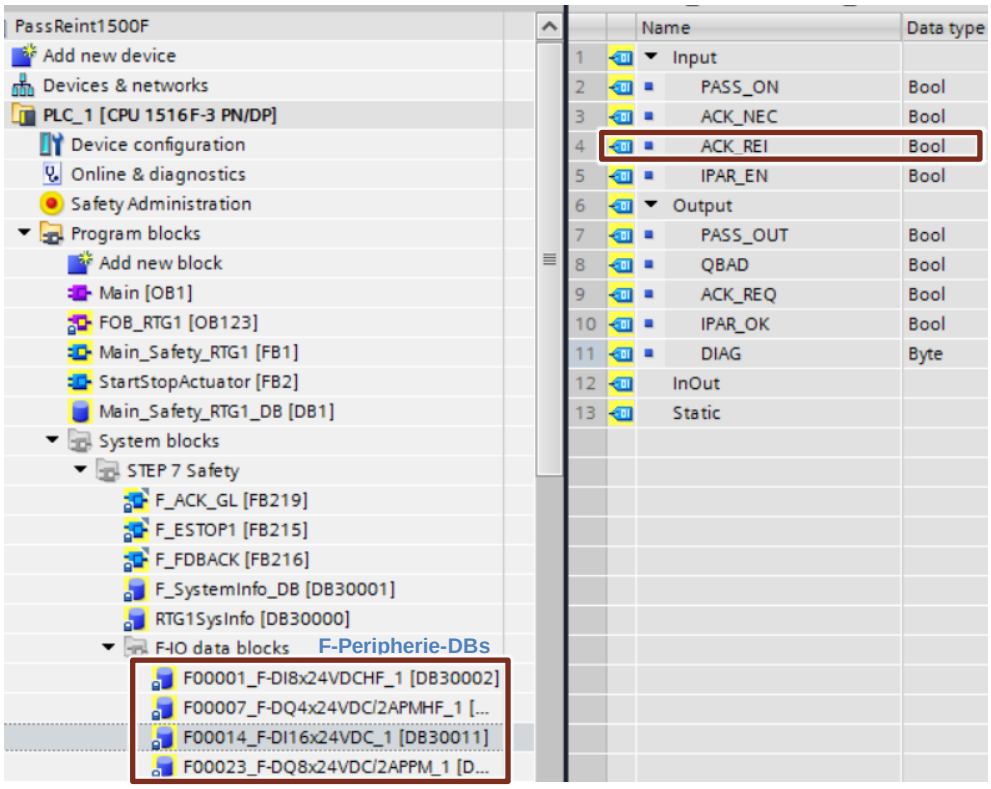

The application example alternatively uses the ACK_GL instruction from STEP 7 Safety:

Figure 2-3 "ACK_GL" from STEP 7 Safety

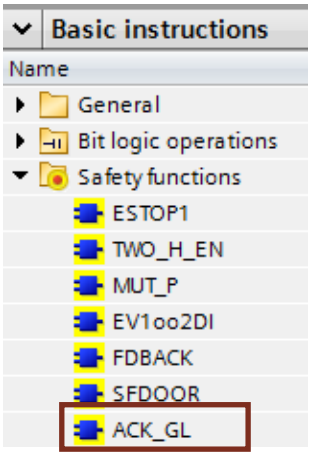

The ACK_GL instruction generates an acknowledgement for the simultaneous reintegration of all F I/Os / channels of the F I/Os of an F runtime group.

2.2 PROFIsafe profile RIOforFA-Safety

The PROFIsafe profile RIOforFA-Safety (**R**emote **IO for F**actory **A**utomation) specifies the value state bits assigned to the process data (Chap. 2.3) in order to display their validity. As a result, the user can react individually to each process data.

The following F-Modules already support the RIOforFA-Safety profile:

- Module of the ET 200MP
- Modules of the S7-1200 F-CPU (partially)

An operation on an S7-1200 or S7-1500 F-CPU is required.

The following F-Modules currently (02/2017) do not yet support the RIOforFA-Safety profile:

- Modules of the ET 200SP

Information on whether the F-I/O supports RIOforFA-Safety can be found in the hardware configuration under "F-parameters":

Figure 2-4 Information on RIOforFA-Safety in the STEP 7 hardware configuration

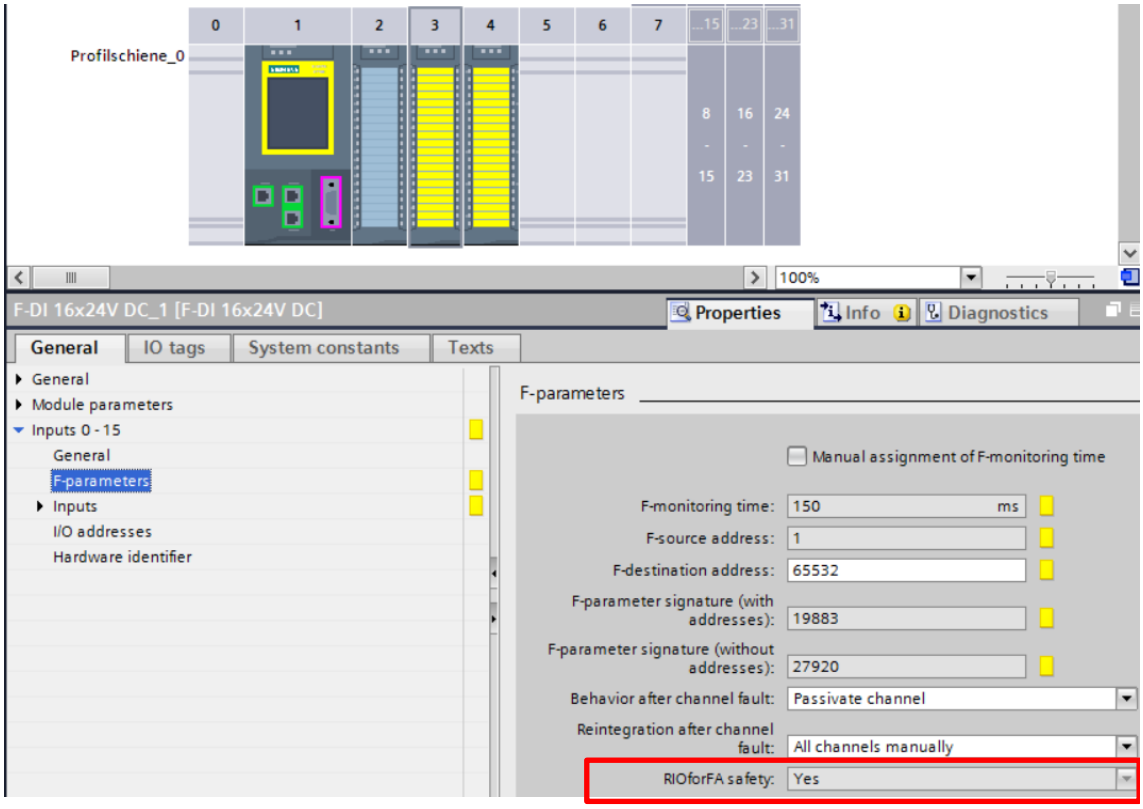

2.3 Value state and QBAD

2.3.1 Using the value state in the safety program

Definition

The value state is a binary additional information on a channel value of an F-IO and is entered into the process image of the inputs (PII).

- 1: A valid process value is output for the channel
- 0: A substitute value is output for the channel

Note

The value state is inversely related to the QBAD signal of a channel from the F-I/O DB:

- QBAD = 1: A substitute value is output for the channel
- QBAD = 0: A valid process value is output for the channel

The table below shows an example of the address assignment for an F-DI:

Table 2-2: Example: Address assignment in PII for F-I/O with 16 digital input channels

Byte in the F-CPU	Assigned bits in the F-CPU per F-I/O:							
	7	6	5	4	3	2	1	0
x + 0	DI 7	DI 6	DI 5	DI 4	DI 3	DI 2	DI 1	DI 0
x + 1	DI 15	DI 14	DI 13	DI 12	DI 11	DI 10	DI 9	DI 8
x + 2	Value state DI 7	Value state DI 6	Value state DI 5	Value state DI 4	Value state DI 3	Value state DI 2	Value state DI 1	Value state DI 0
x + 3	Value state DI 15	Value state DI 14	Value state DI 13	Value state DI 12	Value state DI 11	Value state DI 10	Value state DI 9	Value state DI 8

x = module start address

The position of the channel values in the PII can be found in the device manual of the respective F-I/O.

2.3.2 Important difference to QBAD

In the event of a communication fault, QBAD and the value state behave the same, regardless of whether the RIOforFA-Safety profile is supported or not.

In the event of channel or peripheral faults, QBAD does not change if the RIOforFA-Safety profile is supported.

In the following, both of these cases are examined more closely.

RIOforFA-Safety profile is not supported

In case of a channel fault, the substitute value is written into the PIQ.

Example:

1. Process value "1" is written into the PIQ and output via F-DQ.
2. Channel faults result in the substitute value "0" being written into the PIQ.
3. Via the F-DQ, the substitute value is output.

Figure -5 PIQ if RIOforFA-Safety is not supported

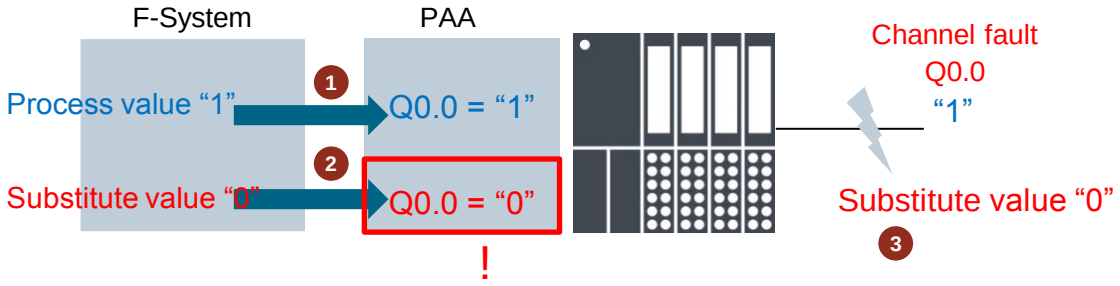

RIOforFA-Safety profile is supported

In the event of a channel fault, the PIQ remains unchanged in a fault scenario. The channel state is exclusively represented by the value state.

Example:

1. Process value "1" is written into the PIQ and output via F-DQ.
2. Despite a channel fault, the process value "1" remains unchanged in the PIQ.
3. Via the F-DQ, the substitute value is output in case of value state = 0, in case of value state = 1, the process value would be output.

Figure -6 PIQ if RIOforFA-Safety is supported

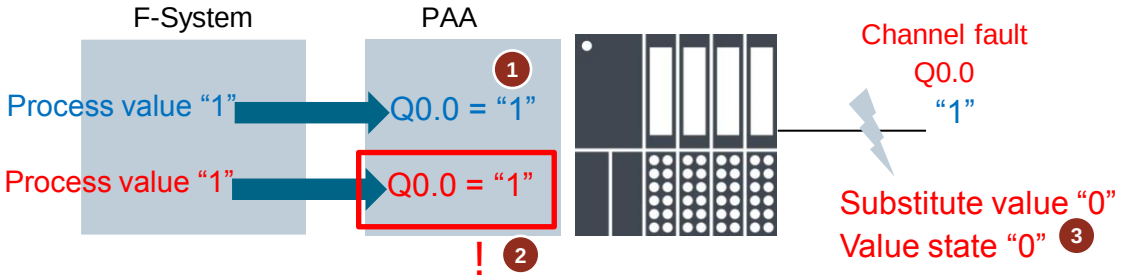

WARNING	**In the event of channel and peripheral faults, the value state switches to 0 in a fault scenario, however, QBAD remains unchanged!** **The module state in a channel or peripheral fault case needs to be determined via the value state!**

PASS_OUT/QBAD/QBAD_I_xx/QBAD_O_xx and value state

In the following table, you will find a description of the behavior of the channel states, of the PASS_OUT, QBAD, QBAD_I_xx/QBAD_O_xx tags and of the value state depending on the F-I/O and F-CPU used.

Table 2-3: Behavior of channel states. Tags and value state depending on the used F-I/O and F-CPU

<table>
<tr><th>Substitute value output to...</th><th>F-I/O with "RIOforFA-Safety" profile with F-CPU S7-1200/1500</th><th>F-I/O without "RIOforFA-Safety" profile with FCPUs S7-1500</th><th>F-I/O with F-CPU S7-300/400</th></tr>
<tr><td>Start-Up of F-System</td><td colspan="2" rowspan="4">QBAD and PASS_OUT= 1
The following applies for all channels:
Channel value = substitute value (0)
Value state = 0*</td><td rowspan="4">QBAD and PASS_OUT= 1
The following applies for all channels:
Channel value = substitute value (0)
QBAD_I_xx and QBAD_O_xx = 1*</td></tr>
<tr><td>Communication fault</td></tr>
<tr><td>F-I/O fault</td></tr>
<tr><td>Channel fault during configuration
passivation of the entire F-I/O</td></tr>
<tr><td>Channel fault during configuration
channel granular passivation</td><td>QBAD and PASS_OUT
Unchanged
The following applies for affected channels:
Channel value = substitute value (0)
Value state = 0</td><td>QBAD and PASS_OUT= 1
The following applies for affected channels:
Channel value = substitute value (0)
Value state = 0*</td><td>QBAD and PASS_OUT= 1
The following applies for affected channels:
Channel value = substitute value (0)
QBAD_I_xx and QBAD_O_xx = 1*</td></tr>
<tr><td>As long as in the F-I/O DB with
PASS_ON = 1 a
Passivation of the F-I/O
is activated</td><td colspan="2">QBAD = 1, PASS_OUT unchanged.
The following applies for all channels:
Channel value = substitute value (0)
Value state = 0*</td><td>QBAD = 1, PASS_OUT unchanged.
The following applies for all channels:
Channel value = substitute value (0)
QBAD_I_xx and QBAD_O_xx = 1*</td></tr>
</table>

* for fail-safe DP norm slaves and fail-safe IO norm devices without "RIOforFA-Safety" profile, value state or QBAD_I_xx and QBAD_O_xx are not available.

2.3.3 Differences in the evaluation with F-CPUs S7-1200/1500 and S7-300/400

In the following table, you will find a description of the differences regarding the evaluation of tags of the F-I/O DB or the value state, depending on the used F-I/O and the F-CPU.

Table 2-4: Differences in the evaluation with F-CPUs S7-1200/1500 and S7-300/400

Tag in F-I/O DB or value state	F-I/O with "RIOforFA-Safety" profile with F-CPU S7-1200/1500	F-I/O without "RIOforFA-Safety" profile with F-CPU S7-1200/1500	F-I/O with F-CPU S7-300/400
ACK_NEC	-[2]	x	x
QBAD	x[3]	x	x
PASS_OUT	x[3]	x	x
QBAD_I_xx[1]	-	-	x
QBAD_O_xx[1]	-	-	x
Value state[1]	x	x	-

[1]QBAD_I_xx and QBAD_O_xx show the validity of the channel value channel granularly and therefore correspond to the inverted value status at S7-1200/1500. For fail-safe DP norm slaves and fail-safe IO norm devices without "RIOforFA-Safety" profile, value state or QBAD_I_xx and QBAD_O_xx are not available.

[2]via configuration of F-I/O; for F-Modules S7-1500/ET 200MP or F-Modulen S7-1200 with the parameter "Channel fault acknowledgement"

[3]Explanations on behavior, see chapter "PASS_OUT/QBAD/QBAD_I_xx/QBAD_O_xx and value state"

3 Application Example

3.1 Overview and faults to be shown

This application example shows the functioning of the passivation and reintegration by means of two STEP 7 projects:

- S7-1500 F-CPU with central I/O modules and the ET 200SP as distributed I/O (Chap. 3.1.1)
- S7-1200 F-CPU with central I/O modules and the 200SP as distributed I/O (Chap. 3.1.2)

The functioning will be demonstrated by means of a (two-channel) Emergency Stop Control Device with contactors as actuators.

Note In the following two figures, the read back signals of the contactor auxiliary contacts are not displayed for the sake of clarity.

3.1.1 S7 project with S7-1500 F-CPU and ET 200SP

The following figure shows the structure of the S7 project with S7-1500 F-CPU and ET 200SP:

Figure 3-1 S7-1500 F-CPU and ET 200SP

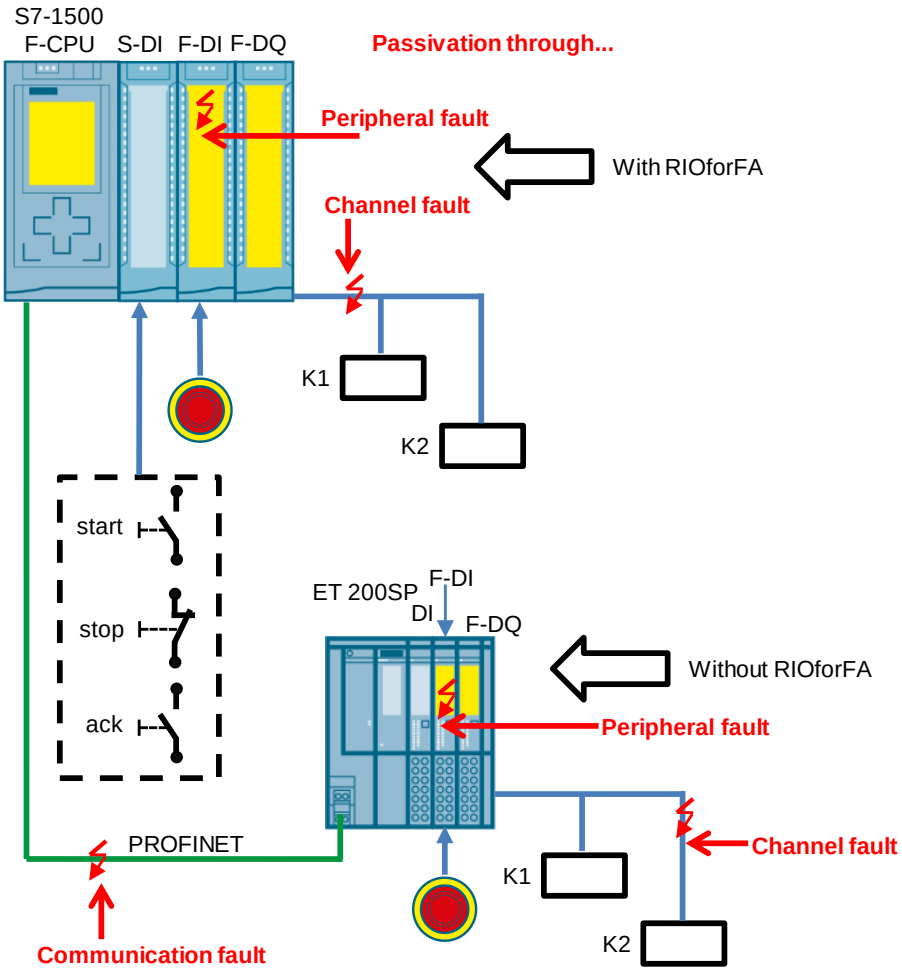

The following functionality is realized in the STEP 7 project:

- "start" activates the central and decentral actuator.
- "stop" deactivates the central and decentral actuator.
- The emergency stop only affects the local actuator.
- With "ack",
  - you acknowledge the emergency stop.
  - you acknowledge a possible read back fault of the contactor auxiliary contacts.
  - you control the manual reintegration.

3.1.2 S7 project with S7-1200 F-CPU

The following figure shows the structure of the S7 project with S7-1200 F-CPU:

Figure 3-2 S7-1200 F-CPU

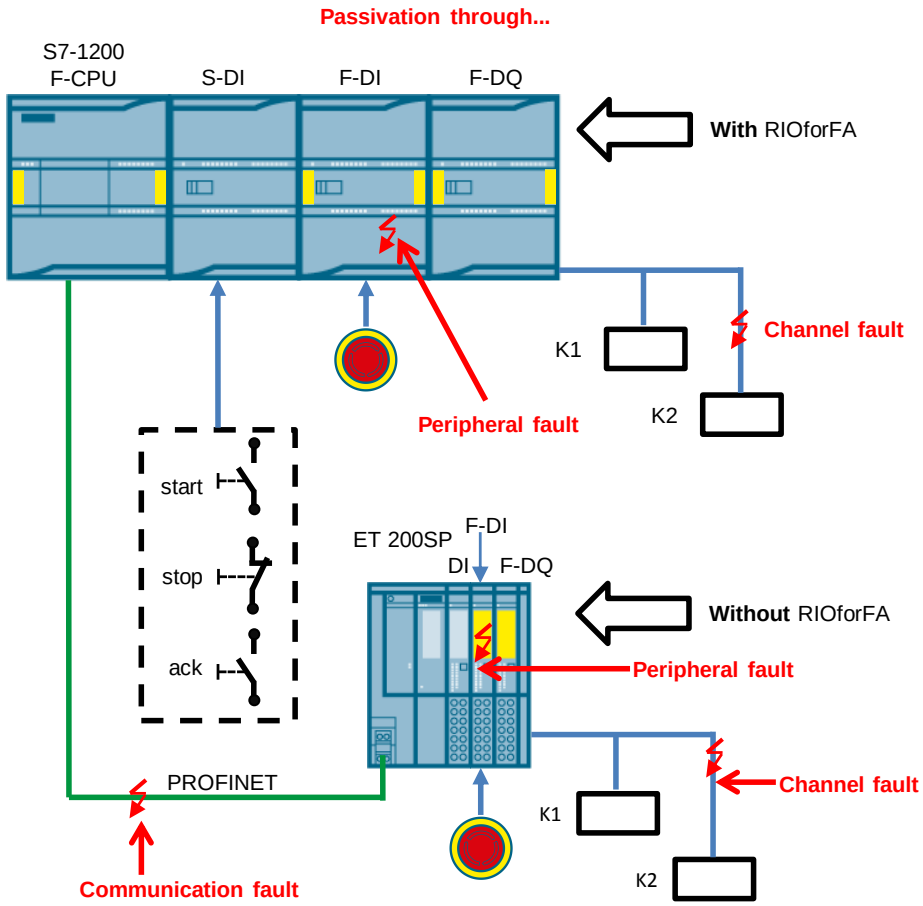

The following functionality is realized in the STEP 7 project:

- "start" activates the central and decentral actuator.
- "stop" deactivates the central and decentral actuator.
- The emergency stop only affects the local actuator.
- With "ack",
  - you acknowledge the emergency stop release.
  - you acknowledge a possible read back fault of the contactor auxiliary contacts.
  - you realize the manual reintegration.

3.2 Components used

3.2.1 STEP 7 project with S7-1500 F-CPU and ET 200SP

This application example was created with the following components:

Hardware

Table 3-1 Hardware components for S7-1500 F-CPU and ET 200SP

Component	Number	Article number
CPU 1516F-3 PN/DP	1	6ES7516-3FN01-0AB0
S7-1500, DI 16X24VDC	1	6ES7521-1BH00-0AB0
F-DI 16X24VDC	1	6ES7526-1BH00-0AB0
F-DQ 8X24VDC 2A PPM	1	6ES7526-2BF00-0AB0
ET 200SP, bus adapter BA 2XSCRJ	1	6ES7193-6AP00-0AA0
ET 200SP, IM155-6PN ST	1	6ES7155-6AU00-0BN0
ET 200SP, DI 8X24VDC HF	1	6ES7131-6BF00-0CA0
ET 200SP, F-DI 8X24VDC HF	1	6ES7136-6BA00-0CA0
ET 200SP, F-DQ 4XDC 24V/2A	1	6ES7136-6DB00-0CA0
Enclosed pushbutton (NO)	4	3SU1
Enclosed pushbutton (NC)	2	3SU1
Emergency stop pushbutton (NC/NC)	2	3SU1851-0NB00-2AA2

Software

Table 3-2: Software components for S7-1500 F-CPU

Component	Number	Article number
STEP 7 Professional V14	1	6ES7822-1..04-..
STEP 7 Safety Advanced V14	1	6ES7833-1FA14-0YA5

3.2.2 STEP 7 project with S7-1200 F-CPU

This application example was created with the following components:

Hardware

Table 3-3: Hardware components for S7-1200 F-CPU and ET 200SP

Component	Number	Article number
CPU 1215FC DC/DC/RLY	1	6ES7215-1HF40-0XB0
SM 1221, 8 DI, DC 24V	1	6ES7221-1BF32-0XB0
SM 1226 F-DI8/16xDC24V	1	6ES7226-6BA32-0XB0
SM 1226 F-DQ 4xDC24V	1	6ES7 226-6DA32-0XB0

Component	Number	Article number
ET 200SP, bus adapter BA 2XSCRJ	1	6ES7193-6AP00-0AA0
ET 200SP, IM155-6PN ST	1	6ES7155-6AU00-0BN0
ET 200SP, DI 8X24VDC HF	1	6ES7131-6BF00-0CA0
ET 200SP, F-DI 8X24VDC HF	1	6ES7136-6BA00-0CA0
ET 200SP, F-DQ 4XDC 24V/2A	1	6ES7136-6DB00-0CA0
Enclosed pushbutton (NO)	4	3SU1
Enclosed pushbutton (NC)	2	3SU1
Emergency stop pushbutton (NC/NC)	2	3SU1851-0NB00-2AA2

Software

Table 3-4: Software components for S7-1200 F-CPU

Component	Number	Article number	Note
STEP 7 Basic V14	1	6ES7822-0AA04-0YA5	Or STEP 7 Professional
STEP 7 Safety Basic V14	1	6ES7833-1FB14-0YA5	Or STEP 7 Safety Advanced

3.3 Configuring the passivation

Introduction

The following steps demonstrate the passivation. The figures show the S7-1500 F-CPU. Unless stated otherwise, all statements also correspond to the S7-1200 F-CPU.

The settings are already made in the corresponding STEP 7 projects.

Configuring the passivation

Configuring the passivation means determining for a fault scenario, whether the affected channel or the entire F-I/O shall switch into the fail-safe mode.

The settings for the passivation and reintegration can be found as follows:

- Double-click on an F-I/O in the "Device configuration":
- "General" tab:
  "F parameters > Behavior after channel fault > Passivate channel"

Figure 3-3: Settings for passivation

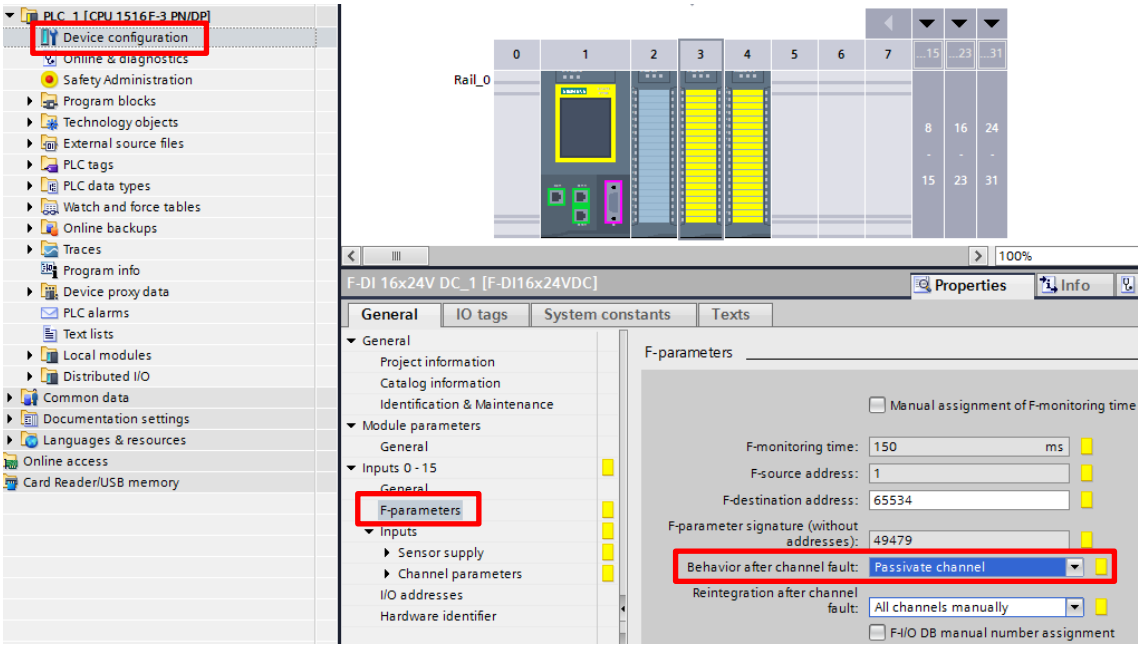

"Passivate channel" is the default setting.

The F-DI/F-DQ modules of the S7-1200 only offer channel granular passivation.

3.4 Configuring a manual reintegration

This variant is prepared in the available STEP 7 projects.

3.4.1 With RIOforFA-Safety profile

Table 2-1 provides information on the possibilities for a reintegration.

Selecting the manual reintegration

The manual reintegration requires certain settings in the hardware configuration:

- Double-click on an F-I/O in the "Device configuration"
- "General" tab > F parameter
- "Behavior after channel fault: Passivate channel"
- "Reintegration after channel fault: All channels manually"

Figure 3-4 Settings in the hardware configuration

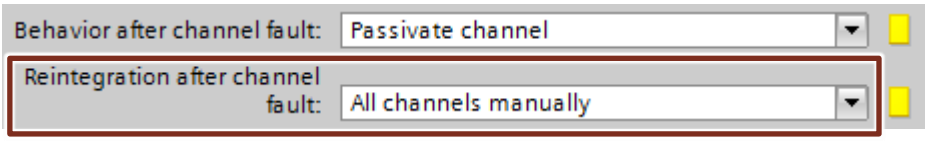

WARNING	**If you want to realize a manual reintegration with ACK_NEC=1, check if the F-I/O supports the RIOforFA-Safety profile. If this is the case, the configuration in the hardware configuration (regarding the manual or automatic reintegration) applies and the ACK_NEC parameter of the F-I/O DB will be ignored.**

The reintegration is performed with a positive edge at the ACK_REI parameter of the F-I/O DB. Chapter 2.1.2 shows the realization in the safety program.

3.4.2 Without RIOforFA-Safety profile

Table 2-1 provides information on the possibilities for a reintegration.

Selecting the manual reintegration

For peripheral and channel faults, the ACK_NEC parameter of the F-I/O DB needs to be 1 for a manual reintegration (default setting).

The following figure shows where to find the ACK_NEC parameter:

Figure 3-5 ACK_NEC parameter of the F-I/O DB of the F-DI of the ET 200SP

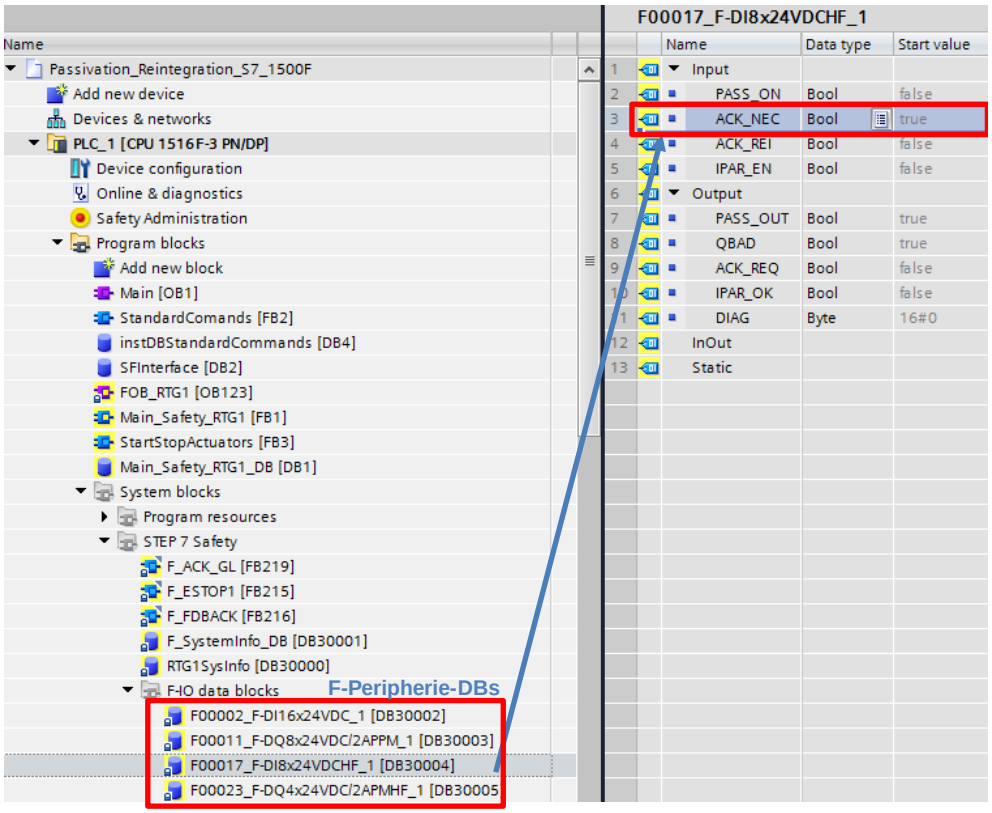

The reintegration is performed with a positive edge at the ACK_REI parameter (see the parameter after ACK_NEC in the figure) of the
F-I/O DB. Chap. 2.1.2 shows the realization in the safety program.

3.5 Configuring an automatic reintegration

WARNING	**Please note that not all processes support an automatic reintegration.**

Communication fault

Regardless of whether the RIOforFA-Safety profile is supported, the following applies for communication faults:

After communication faults, F-Modules can only be integrated manually. In this case, the settings for manual acknowledgement are ignored. For the reintegration, the ACK_REI parameter of the F-I/O DB requires a positive edge. Chap. 2.1.2 shows the realization in the safety program.

3.5.1 With RIOfor FA profile

Table 2-1 provides information on the possibilities for a reintegration.

Peripheral and channel faults

Peripheral and channel faults require settings in the hardware configuration:

- Double-click on an F-Module in the "Device configuration"
- "General" tab > F parameters
- "Behavior after channel fault > Passivate channel"
- "Reintegration after channel fault: all channels automatically"

Figure 3-6 Settings in the hardware configuration

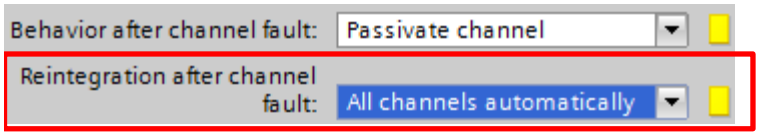

3.5.2 Without RIOforFA-Safety profile

Table 2-1 provides information on how to realize the reintegration.

Peripheral and channel faults

For peripheral and channel faults, the ACK_NEC parameter of the F-I/O DB needs to be 0 for the automatic reintegration.

Figure 3-5 shows the ACK_NEC parameter to be set.

4 Operation

This chapter demonstrates the previously presented fault cases and the reintegration of the F-I/O.

4.1 Passivation through peripheral / channel faults and reintegration

The following actions perform a passivation and reintegration.

Table 4-1: Passivation through peripheral / channel faults and reintegration

No.	Action	Note
1	Trigger a peripheral/channel fault (e.g. by interrupting the power supply at the F-DI).	• The affected channels output substitute values (0 signal). • The value state of the affected channels outputs a 0 signal. • For RIOforFA-Safety: Process image of F output (PIQ) shows process value • No RIOforFA-Safety: PIQ of F output shows substitute value 0
2	Clear the fault.	If you have configured **manual** reintegration: • The ACK_REI parameter in the F-I/O DB does not automatically receive a positive edge from the F system. • The value state of the affected channels continues to output a 0 signal. • The affected channels continue to be passivated If you have configured **automatic** reintegration: • The value state of the affected channels outputs a 1 signal. • The affected F channels are reintegrated and output process values again.
3	If you have configured **manual** reintegration: Press the "ack" acknowledgement button twice. The application can then be restarted. If you have configured **automatic** reintegration: see No. 4	1. <u>Pressing "ack"</u> • With ack = 1, the ACK_REI parameter in the F-I/O DB receives a positive edge. • The value state of the affected channels outputs a 1 signal. • The affected F channels are reintegrated 2. <u>Pressing "ack"</u> • With ack = 1, the F library block "FDBACK" receives the acknowledgement signal. The actuator can then be switched on again via the "ON" input. Alternatively to pressing "ack" twice, you can also use two separate pushbuttons or buttons on a panel.
4	**Automatic** reintegration: Press the "ack" acknowledgement button	With ack = 1, the F library block "FDBACK" receives the acknowledgement signal. The actuator can then be switched on again via the "ON" input.

4.2 Passivation through communication faults and reintegration

The following actions perform a passivation and reintegration.

Table 4-2 Passivation through communication faults and reintegration

No.	Action	Note
1	Pull out the PROFINET cable from the F-CPU or the ET 200SP.	• The affected channels of the ET 200SP output substitute values (0 signals). • The value state of the affected channels of the ET 200SP outputs a 0 signal. • For RIOforFA-Safety: Process image of F output (PIQ) shows process value • No RIOforFA-Safety: PIQ of F output shows substitute value 0.
2	Clear the fault by reestablishing the connection.	If you have configured **manual** reintegration: • The ACK_REI parameter in the F-I/O DB does not automatically receive a positive edge from the F system. • The value state of the affected channels continues to output a 0 signal. • The activated F channels of the ET 200SP continue to be passivated. If you have configured **automatic** reintegration: In the event of communication faults, the F system behaves as described above under "manual reintegration", regardless of the configuration of ACK_REI.
3	Press the "ack" acknowledgement button twice. The application can then be restarted.	1. Pressing "ack" • With ack = 1, the ACK_REI parameter in the F-I/O DB receives a positive edge. • The value state of the affected channels outputs a 1 signal. • The affected F channels are reintegrated 2. Pressing "ack" • With ack = 1, the F library block "FDBACK" receives the acknowledgement signal. The actuator can then be switched on again via the "ON" input. Alternatively to pressing "ack" twice, you can also use two separate pushbuttons or operating buttons on a panel.

5 Appendix

5.1 Service and Support

Industry Online Support

Do you have any questions or need support?

Siemens Industry Online Support offers access to our entire service and support know-how as well as to our services.

Siemens Industry Online Support is the central address for information on our products, solutions and services.

Product information, manuals, downloads, FAQs and application examples – all information is accessible with just a few mouse clicks at
https://support.industry.siemens.com/

Technical Support

Siemens Industry's Technical Support offers quick and competent support regarding all technical queries with numerous tailor-made offers – from basic support to individual support contracts.

Please address your requests to the Technical Support via the web form:
www.siemens.de/industry/supportrequest

Service offer

Our service offer comprises, among other things, the following services:

- Product Training
- Plant Data Services
- Spare Parts Services
- Repair Services
- On Site and Maintenance Services
- Retrofit & Modernization Services
- Service Programs and Agreements

Detailed information on our service offer is available in the Service Catalog:
https://support.industry.siemens.com/cs/sc

Industry Online Support app

Thanks to the "Siemens Industry Online Support" app, you will get optimum support even when you are on the move. The app is available for Apple iOS, Android and Windows Phone.
https://support.industry.siemens.com/cs/en/en/sc/2067

5.2 Links and Literature

Table 5-1: Links and Literature

No.	Topic
\1\	Siemens Industry Online Support https://support.industry.siemens.com
\2\	Link auf den Beitrag https://support.industry.siemens.com/cs/ww/en/view/22304119

5.3 Change documentation

Table 5-2: Change documentation

Version	Date	Modifications
V1.0	03/2006	First version
V2.0	07/2017	Update to STEP 7 V14